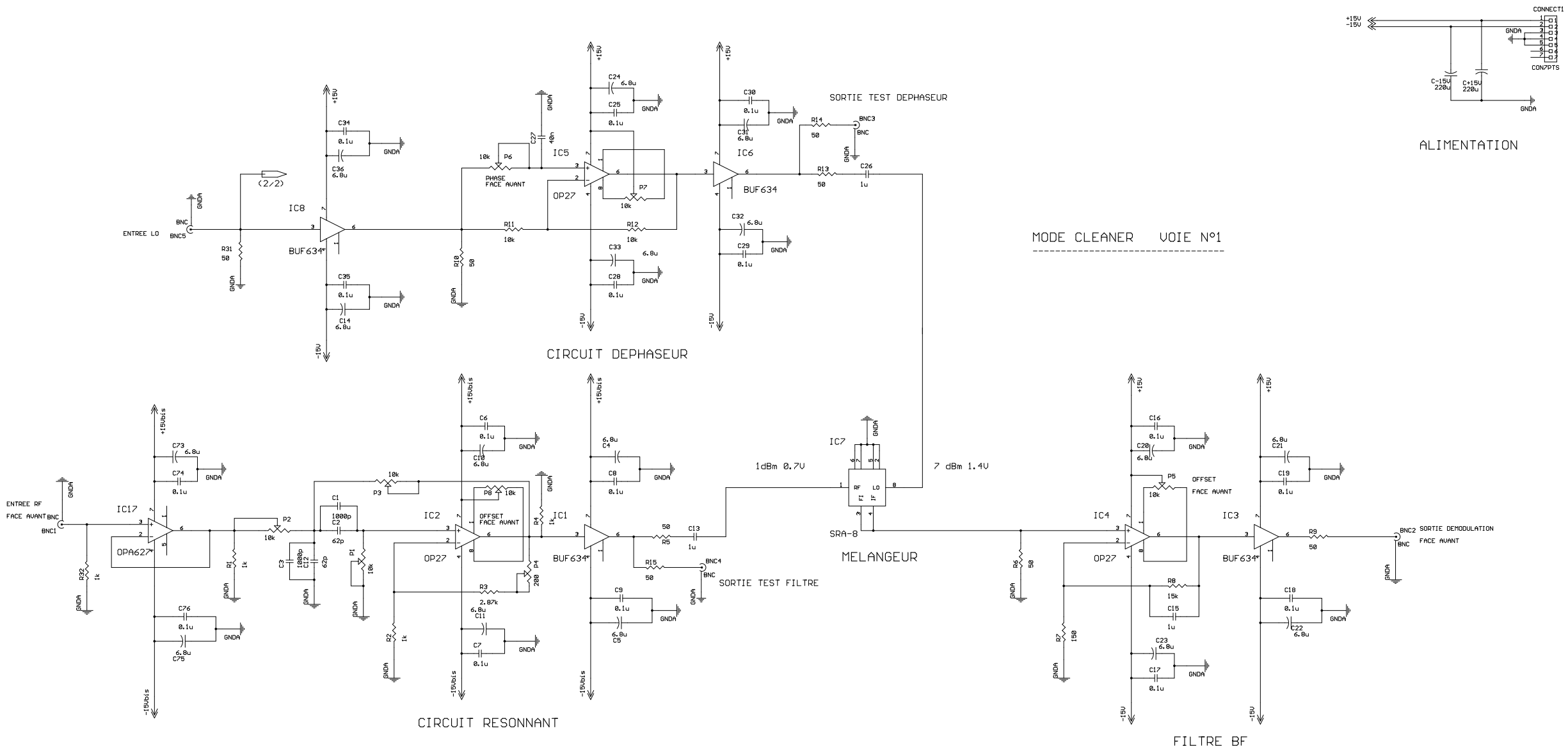

TITLE: clean	
Document Number:	REV:
Date: 30/11/2000 11:13:52	Sheet: 1/2