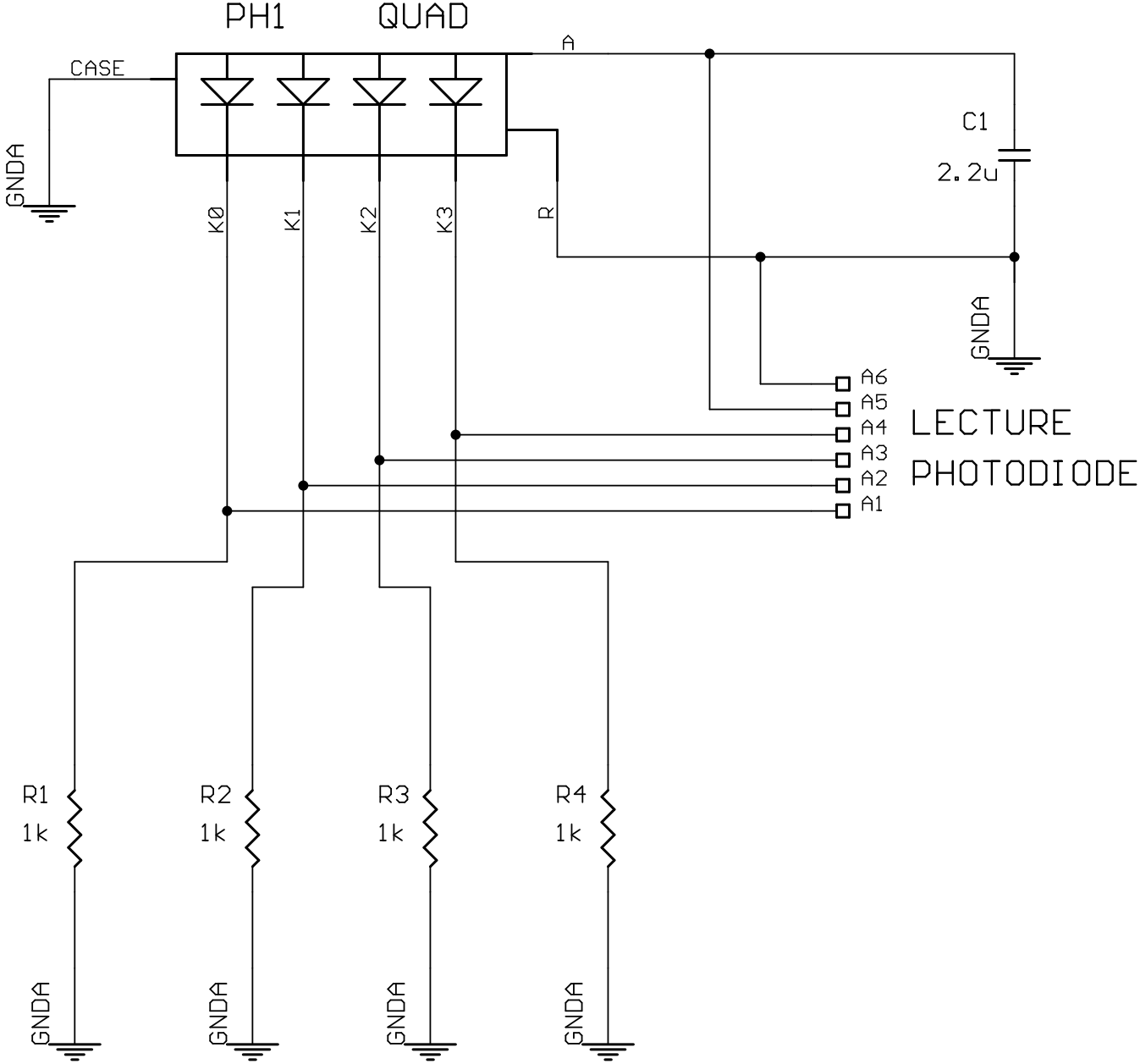

DIODE QUADRANT